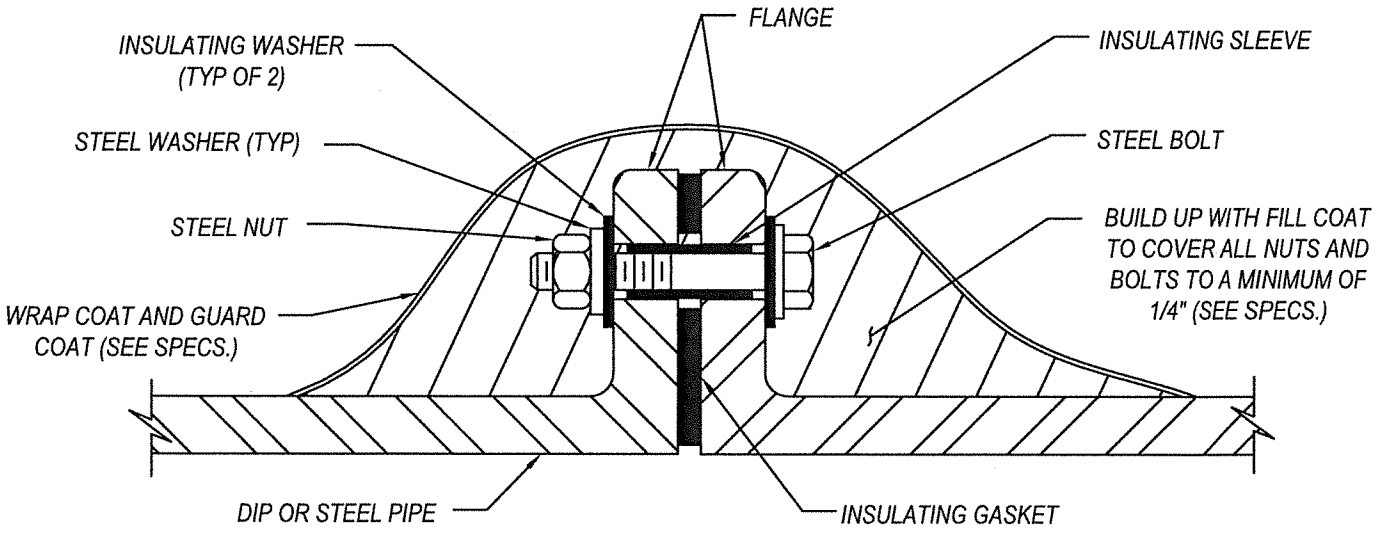

CITY OF NAPA

PUBLIC WORKS - WATER DIVISION

INSULATING JOINT COATING

DATE REVISED	DECEMBER 2015
CHECKED	
APPROVED	
SCALE	NONE

DWG NO. **W - 25B**