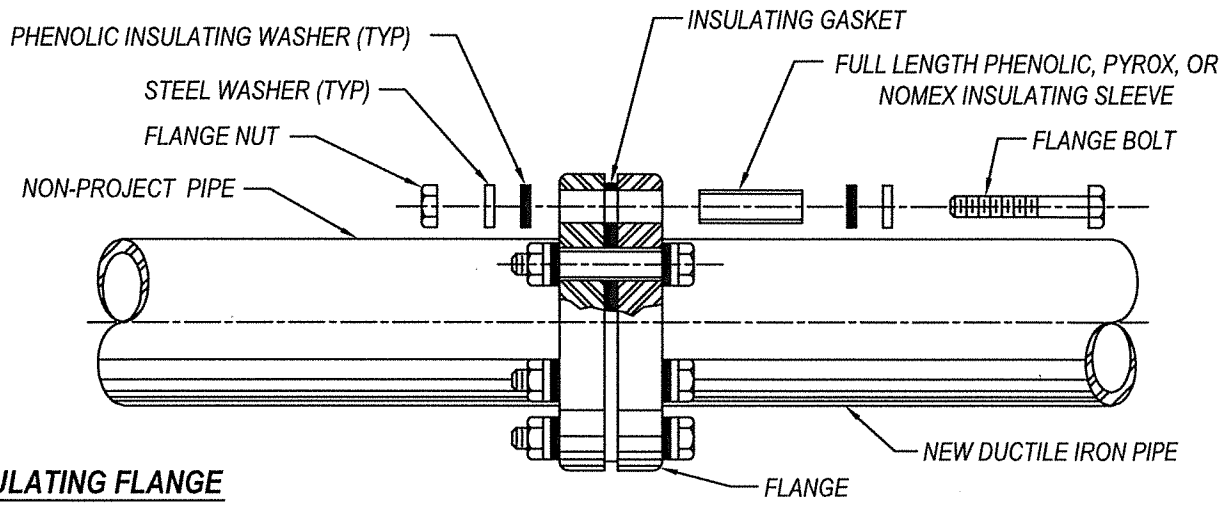

INSULATING FLANGE

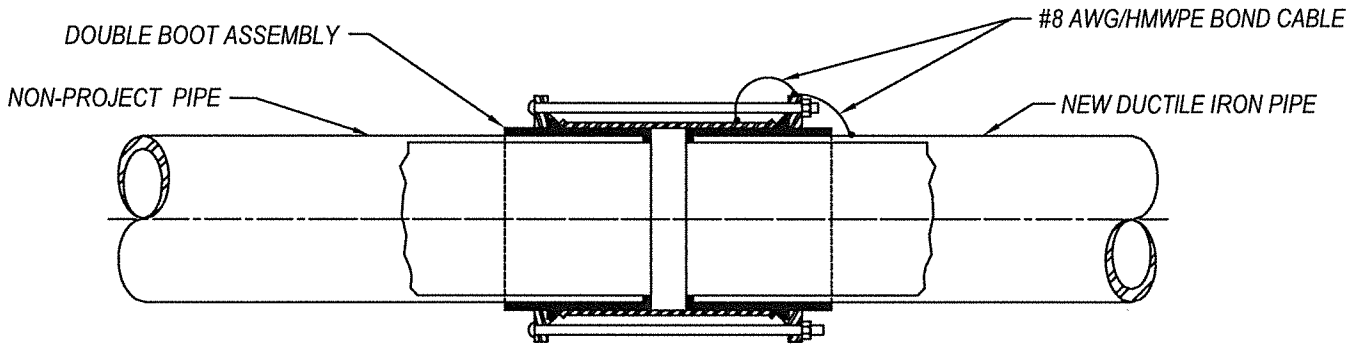

INSULATING FLEXIBLE COUPLING

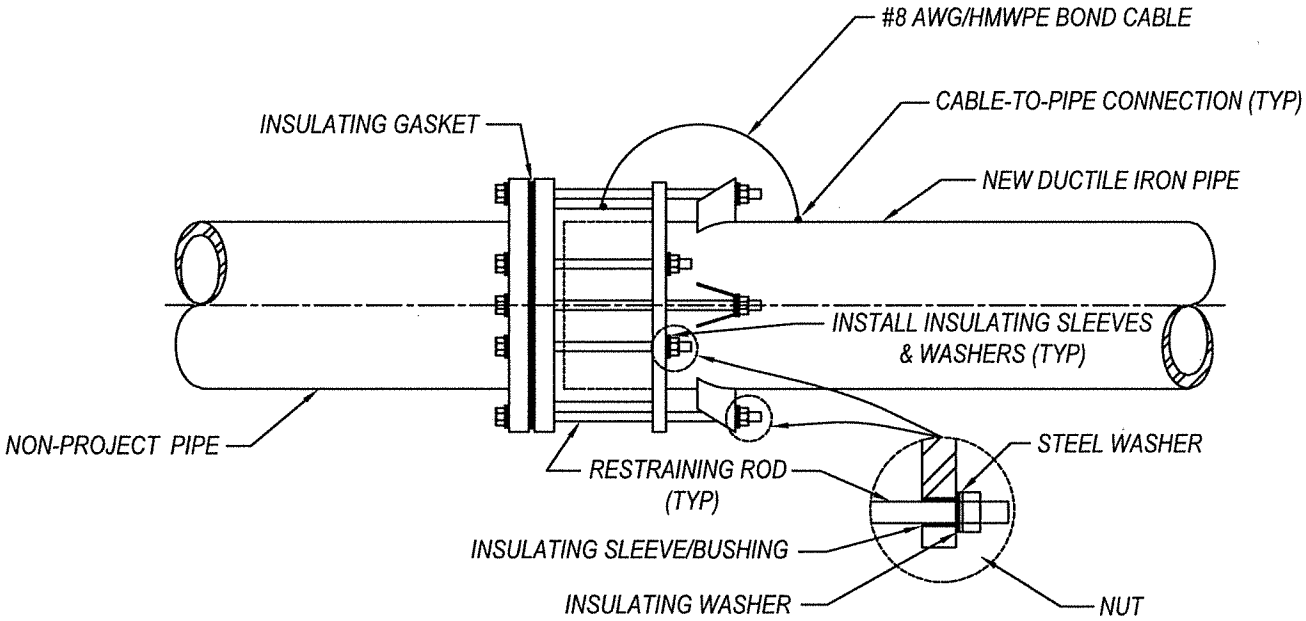

INSULATING FLANGED COUPLING ADAPTER

CITY OF NAPA		PUBLIC WORKS - WATER DIVISION
INSULATING JOINT	DATE REVISED DECEMBER 2015 CHECKED APPROVED SCALE NONE	DWG NO. **W - 25A**