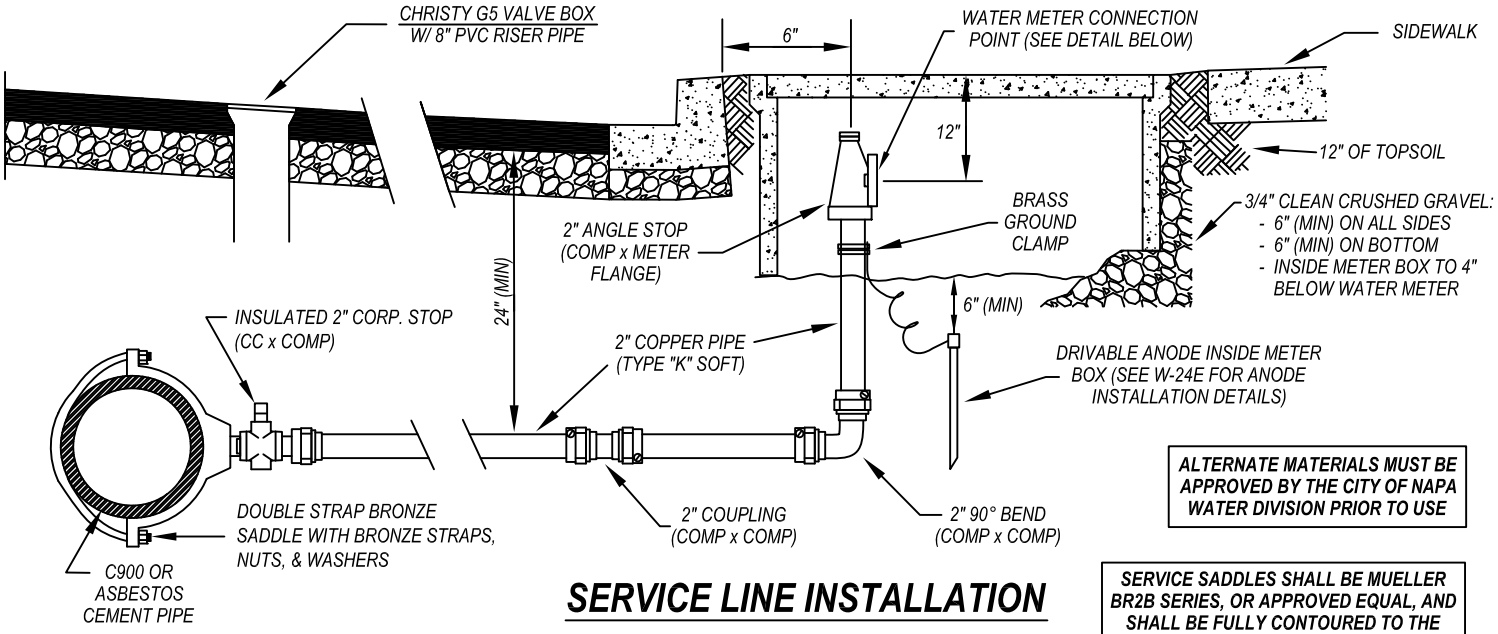

SERVICE LINE INSTALLATION

ALTERNATE MATERIALS MUST BE APPROVED BY THE CITY OF NAPA WATER DIVISION PRIOR TO USE

SERVICE SADDLES SHALL BE MUELLER BR2B SERIES, OR APPROVED EQUAL, AND SHALL BE FULLY CONTOURED TO THE OUTSIDE DIAMETER OF THE WATER MAIN.

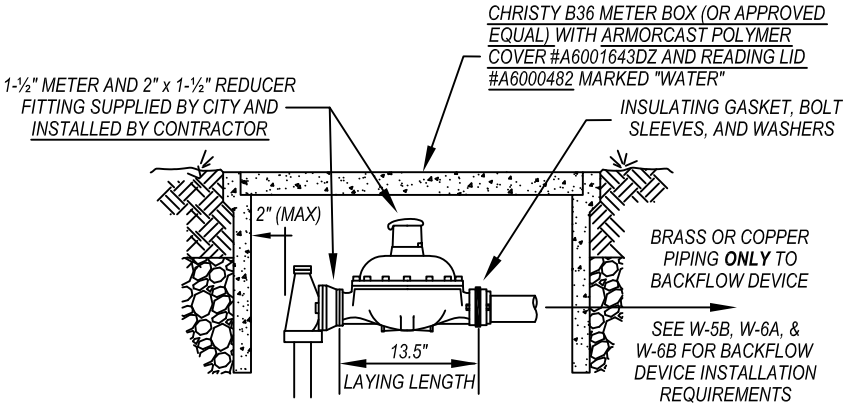

1-½" METER INSTALLATION

FLANGETYTE GASKETS BY U.S. PIPE SHALL BE USED FOR ALL FLANGED FITTINGS. INSULATING GASKETS SHALL BE TYPE E 1/8" THICK FULL-FACED NEOPRENE PHENOLIC GASKETS INSTALLED WITH GRADE G-10 FIBERGLASS EPOXY INSULATING BOLT SLEEVES AND WASHERS.

APPROVED FITTINGS

DESCRIPTION	MUELLER
INSULATED CORP. STOP (CC X COMP)	N-35008
COUPLING (COMP x COMP)	H-15403
90° BEND (COMP x COMP)	H-15526
ANGLE STOP (COMP x METER FLANGE)	B-24276

**** EXCEPT FOR INSULATED FITTINGS, FORD OR JONES EQUIVALENT ALSO APPROVED**

NOTES

1. METER BOX AND SERVICE LINE SHALL BE INSTALLED 3-FT (MIN) OUTSIDE OF DRIVEWAY, DRIVEWAY APPROACHES, AND OTHER VEHICULAR ACCESS WAYS.
2. SERVICE LATERAL FROM MAIN TO METER SHALL BE 2-INCH TYPE "K" SOFT COPPER PIPE. WATER SERVICE SHALL BE REDUCED TO 1.5-INCHES AT THE METER (SEE METER INSTALLATION DETAIL).
3. METER, STRAINER, ISOLATION GASKET (FOR METER ONLY), BOLT SLEEVES AND WASHERS ARE PROVIDED BY CITY OF NAPA AFTER PAYMENT OF METER SET FEE AND INSTALLED BY CONTRACTOR.
4. ALL BURIED SECTIONS OF METALLIC PIPE AND FITTINGS SHALL BE WRAPPED WITH AN 8-MIL PLASTIC SLEEVE. COPPER PIPE NOT WRAPPED IN A PLASTIC SLEEVE SHALL BE NSF 61 APPROVED PLASTIC COATED COPPER TUBING (TYPE "K" SOFT, BLUE IN COLOR).
5. EXISTING WATER MAINS SHALL BE HOT-TAPPED BY CITY FORCES AT DEVELOPER'S EXPENSE. HOT-TAP INCLUDES SADDLE VALVE, G5 BOX, PVC RISER, AND MISC. FITTINGS. SEE W-16 FOR HOT-TAP REQUIREMENTS. HOT-TAP SHALL BE INSTALLED 36-IN (MIN) FROM ANY TAP, BELL, FITTING, OR OTHER WATER SERVICE.
6. APPROVED BACKFLOW PREVENTION DEVICES SHALL BE INSTALLED AND TESTED AND WATER METERS SHALL BE SET, PRIOR TO ANY USE OF WATER SERVICE. USE OF JUMPERS, HOSE BIBS, OR OTHER DEVICES SHALL NOT BE PERMITTED.
7. METERS SHALL BE PLACED A MINIMUM OF 3-FT FROM ANY OBSTRUCTION (SIGN POST, MAIL BOX, FENCES, WALLS, ETC.). NO TREES SHALL BE PLANTED WITHIN 10-FT OR LARGE SHRUBS WITHIN 5-FT OF THE METER BOX. SEE W-18 FOR ADDITIONAL REQUIREMENTS.
8. SERVICES SHALL BE SIZED APPROPRIATELY FOR THE INTENDED USE OF THE SERVICE. WATER DIVISION MAY REQUEST AN ENGINEERED WATER ANALYSIS OF THE SYSTEM (NEW OR EXISTING) TO EVALUATE THE APPROPRIATENESS OF THE WATER SERVICE SIZE. NO UNDERSIZED WATER SERVICES SHALL BE PERMITTED.

CITY OF NAPA — PUBLIC WORKS - WATER DIVISION

1½" WATER SERVICE (AC AND C900 WATER MAINS)

DATE REVISED:	MAY 2016
CHECKED:	DCF
APPROVED:	MJH
SCALE:	NONE

DWG NO. **W - 2B**