Engineering Division
Phone: (707) 257-9530

Community Development Department
1600 First St., P.O. Box 660
Napa, CA 94559-0660

Planning Division
Phone: (707) 257-9530

Building Division
Phone: (707) 257-9540
Inspections: (707) 257-1063

Facsimile: (707) 257-9522

Napa Fire Department
Fire Prevention Division
Phone: (707) 257-9590

NEW GARAGE OR SHED

General structural notes

Exterior siding - nailing schedule

5/8" Plywood nails	8d's @ 4" O.*C.* edge 8d's @ 12" O.*C.* field		1/2" Plywood nails:	8d's @ 6-1/2" O.*C.* edge 8d's @ 121' O.*C.* field

Braced Wall Panel	**Design loads**	
APA rated (OSB or pl*ywood)* nailed with 8d's @ 6" O.*C.* edge and 12" O.*C.* field. min. *4'-0"* panels with 5/8" x *10"* anchor bolts 'with 2" x 2" x 3/16" washer installed @ each end of each panel. California Building Code. Table 23-11B-2Ch 23 2001	Roof live load: Roof dead load: Wind load: *80* mph exposure C Seismic zone	22 Psf *20* Psf 10 Psf 4

General notes

1.Footing shall be placed on firm undisturbed soil of compacted engineered fill. Maximum soil design bearing pressure of 1000 psi.

2. Concrete: concrete shall have a minimum of *2500* psi breaking strength at *28* days with ½ re-bar. reinforcing steel.

3. *5/8" D*iameter concrete expansion anchors may be used at occasional plate break instead of anchor bolts. (Subject *to approval of local enforcement agency).*

4. All const. shall be in accordance with 2001 California Building Code Ch 2320. .

5. Nailing shall conform *to* 2001 California Building Code table 23-11-B-1.

6. R*oof* construction: Composition shingles over 15lb felt with lapped edges over 1/2" APA rated exp sheathing with staggered joints over pre-engineered roof trusses @ 24" O.*C. W*ith 8d's @ 6" O.*C.* on edges 4 12" O.*C.* in field.

7. All framing lumber shall be Douglas fir and meet or exceed the following commercial grades.
   a. Studs, plates, blocking, joists rafters, ledgers, #2
   b. Beams and posts 6x and larger #1

8. Wood shall have average moisture content of 19% at the time of erection with no single member having a moisture content exceeding 22%.

9. Pressure treated lumber shall be Douglas fir with grade per plan.
   *a. A*ll w*ood* in contact with foundation concrete "above.
   b. All w*ood* embedded in concrete or in contact with earth "ground contact.

10. All pressure treated lumber shall be clean, dry and free from surface residue.

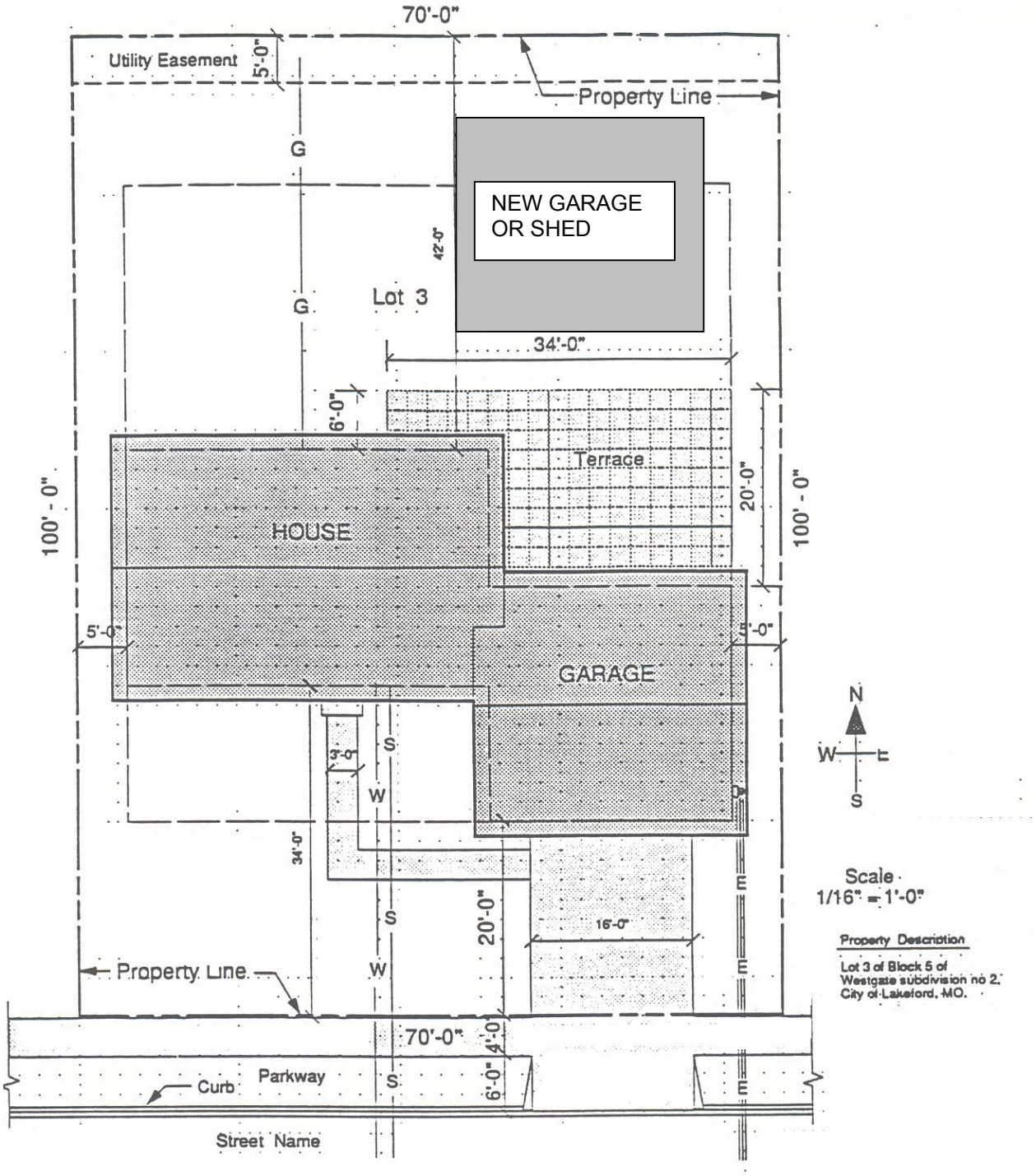
70'-0"
Utility Easement
5'-0"
Property Line
G
NEW GARAGE
OR SHED
42'-0"
G
Lot 3
34'-0"
6'-0"
Terrace
20'-0"
100' - 0"
100' - 0"
HOUSE
5'-0"
5'-0"
GARAGE
N
W
E
S
3'-0"
S
W
34'-0"
20'-0"
16'-0"
E
S
W
E
Scale
1/16" = 1'-0"
Property Description
Lot 3 of Block 5 of
Westgate subdivision no 2,
City of Lakeford, MO.
Property Line
70'-0"
4'-0"
Parkway
Curb
6'-0"
S
E
Street Name

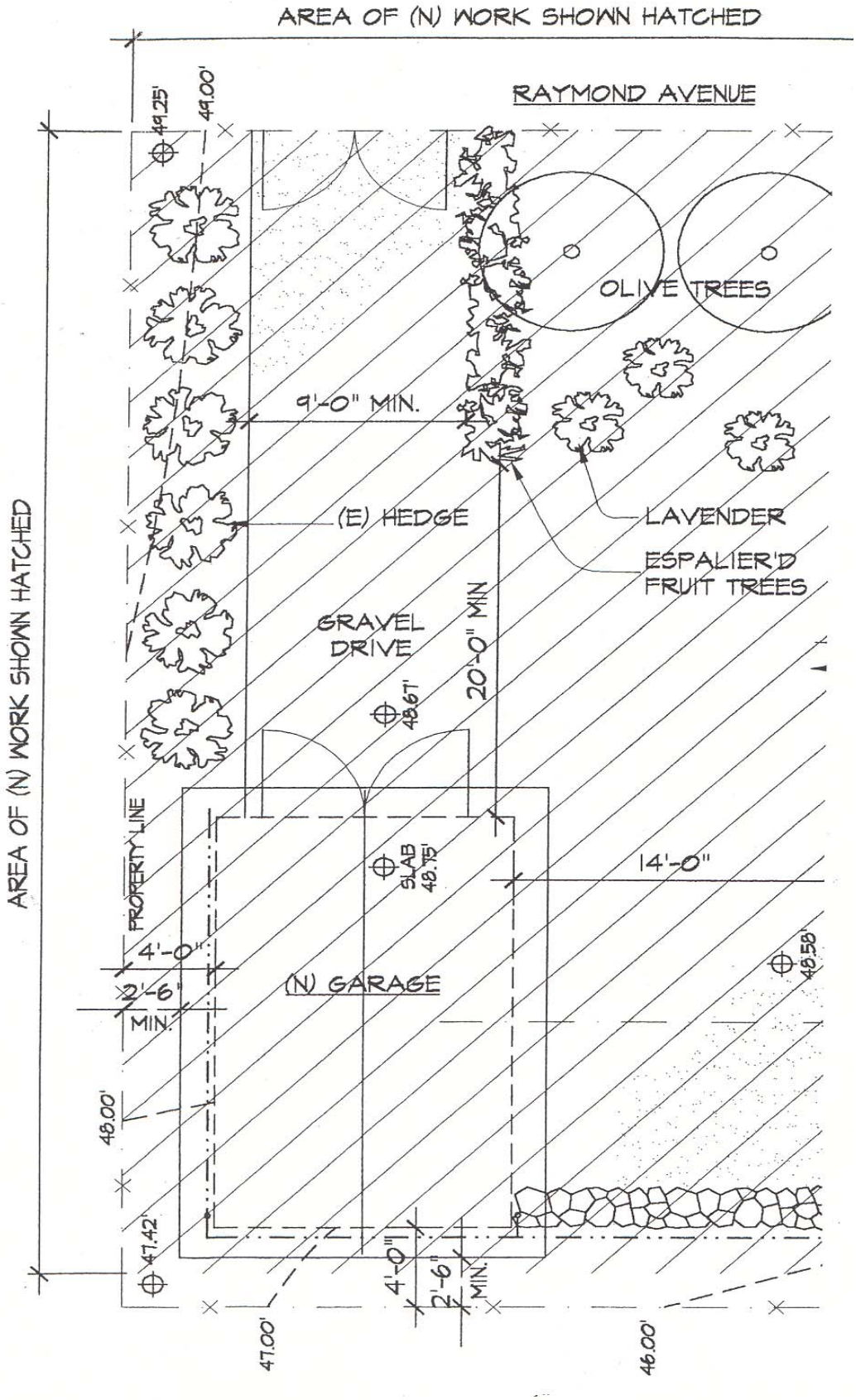
AREA OF (N) WORK SHOWN HATCHED
RAYMOND AVENUE
49.25'
49.00'
OLIVE TREES
9'-0" MIN.
(E) HEDGE
LAVENDER
ESPALIER'D FRUIT TREES
GRAVEL DRIVE
20'-0" MIN
48.67'
AREA OF (N) WORK SHOWN HATCHED
PROPERTY LINE
SLAB 48.75'
14'-0"
4'-0"
2'-6" MIN.
(N) GARAGE
48.58'
48.00'
47.42'
4'-0"
2'-6" MIN.
47.00'
46.00'

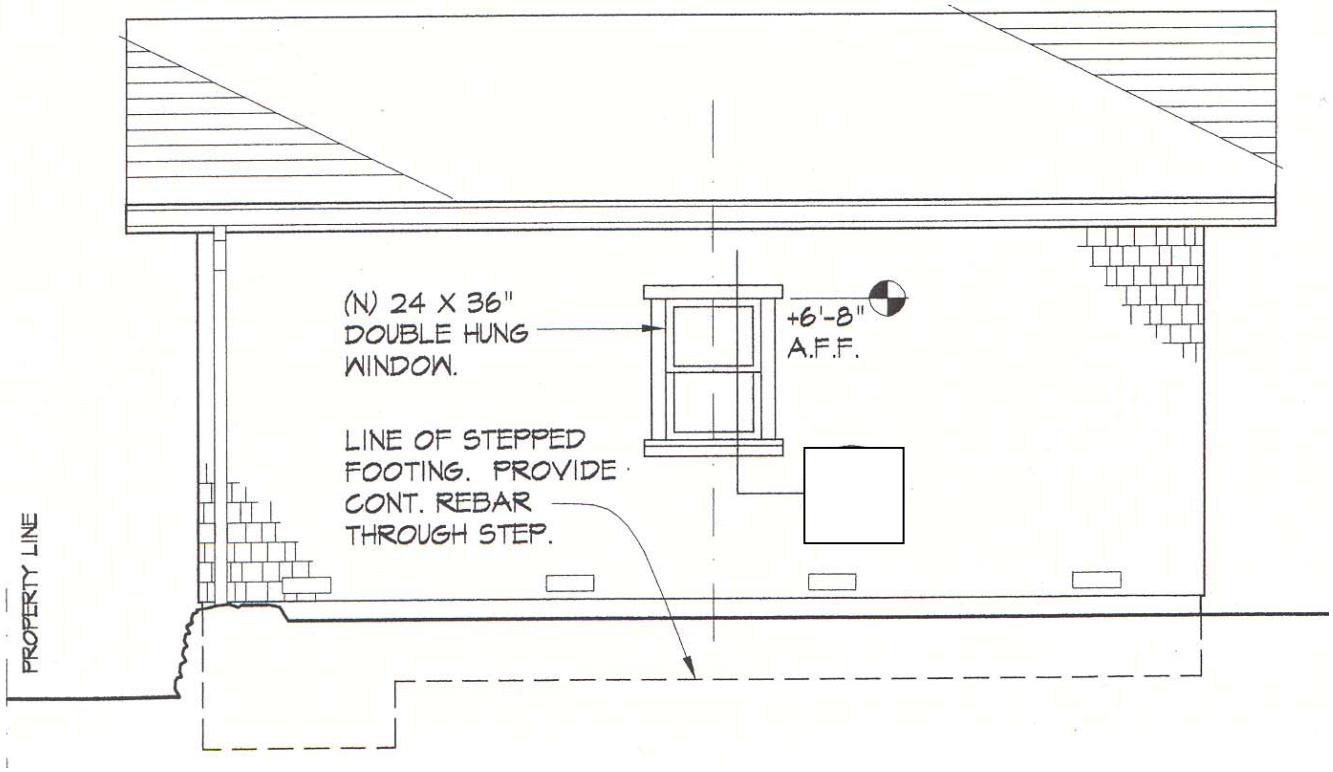
(N) 24 X 36"
DOUBLE HUNG
WINDOW.
+6'-8"
A.F.F.
LINE OF STEPPED
FOOTING. PROVIDE
CONT. REBAR
THROUGH STEP.
PROPERTY LINE

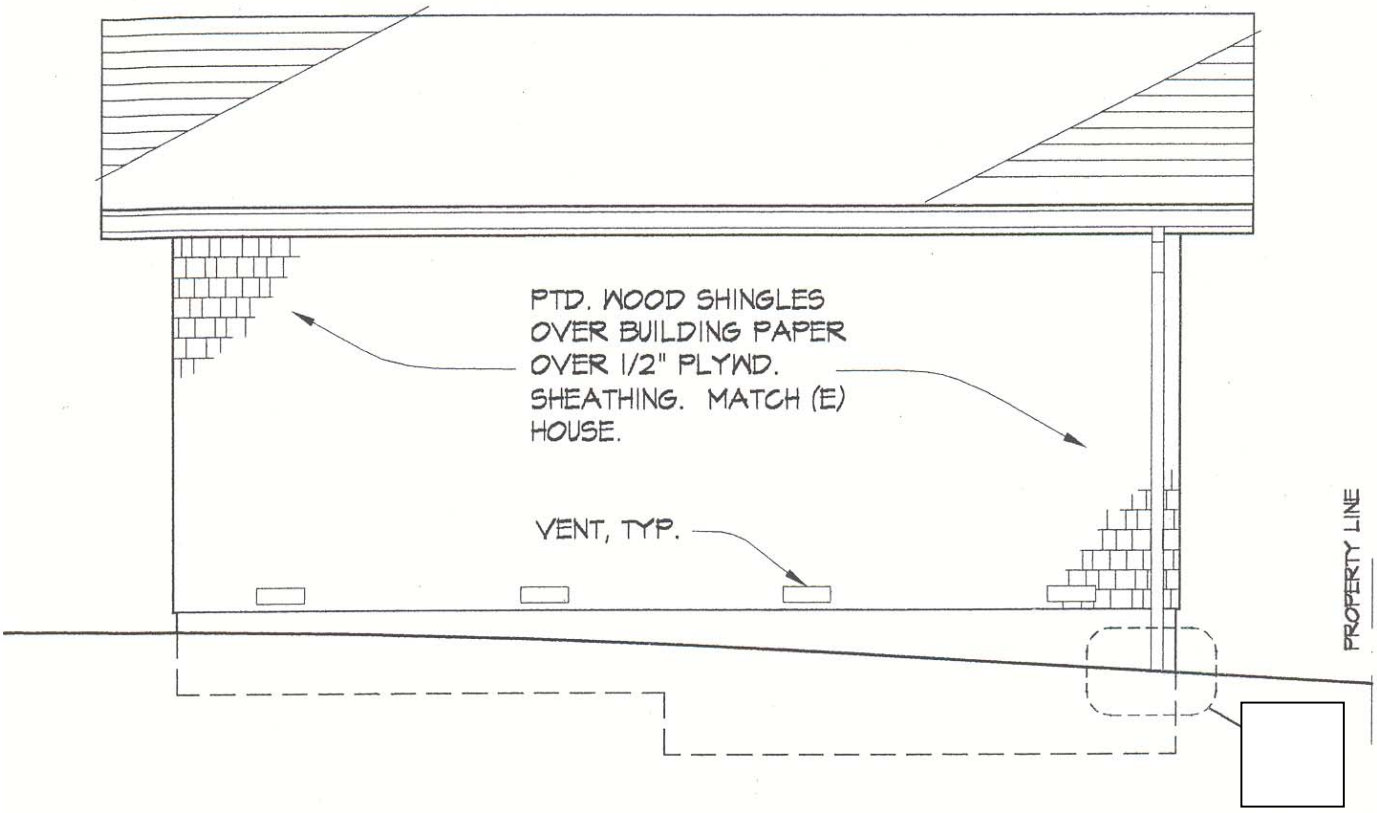
PTD. WOOD SHINGLES
OVER BUILDING PAPER
OVER 1/2" PLYWD.
SHEATHING. MATCH (E)
HOUSE.
VENT, TYP.
PROPERTY LINE

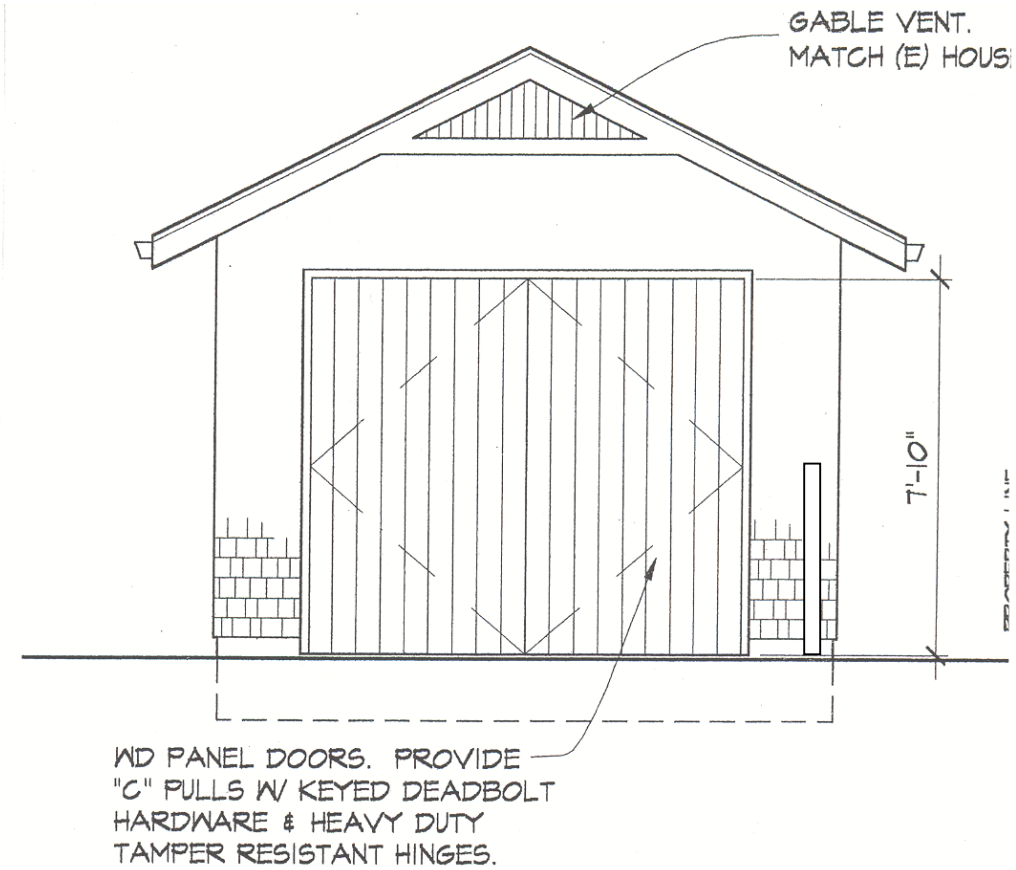
GABLE VENT.
MATCH (E) HOUS
7'-10"
WD PANEL DOORS. PROVIDE
"C" PULLS W/ KEYED DEADBOLT
HARDWARE & HEAVY DUTY
TAMPER RESISTANT HINGES.

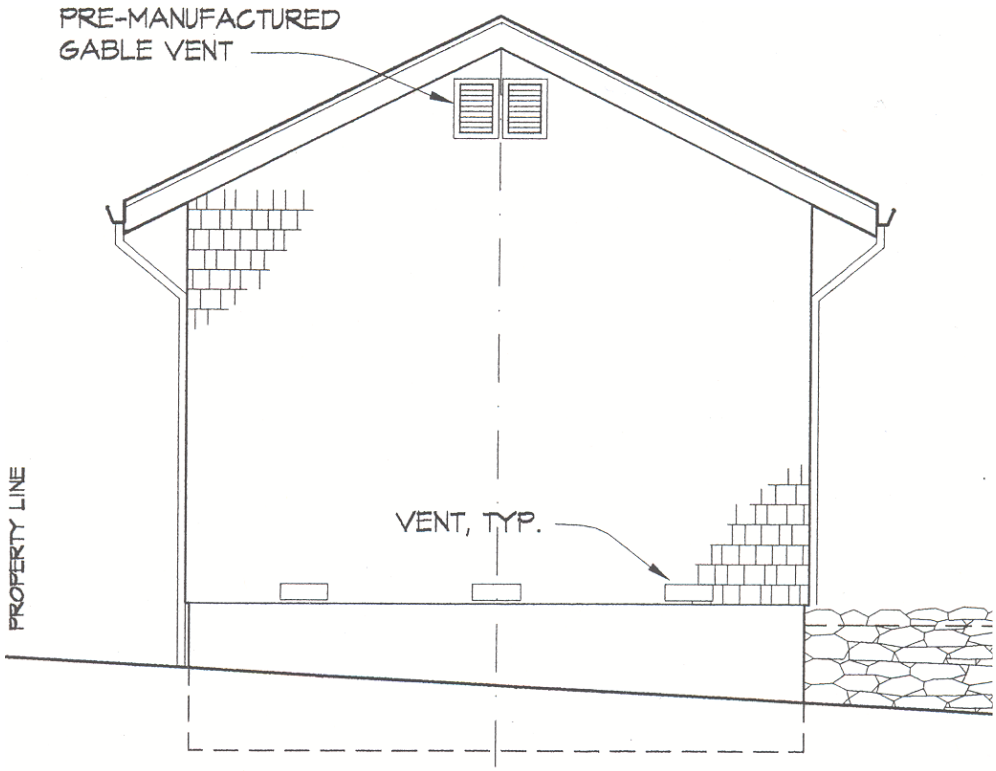
PRE-MANUFACTURED
GABLE VENT
PROPERTY LINE
VENT, TYP.

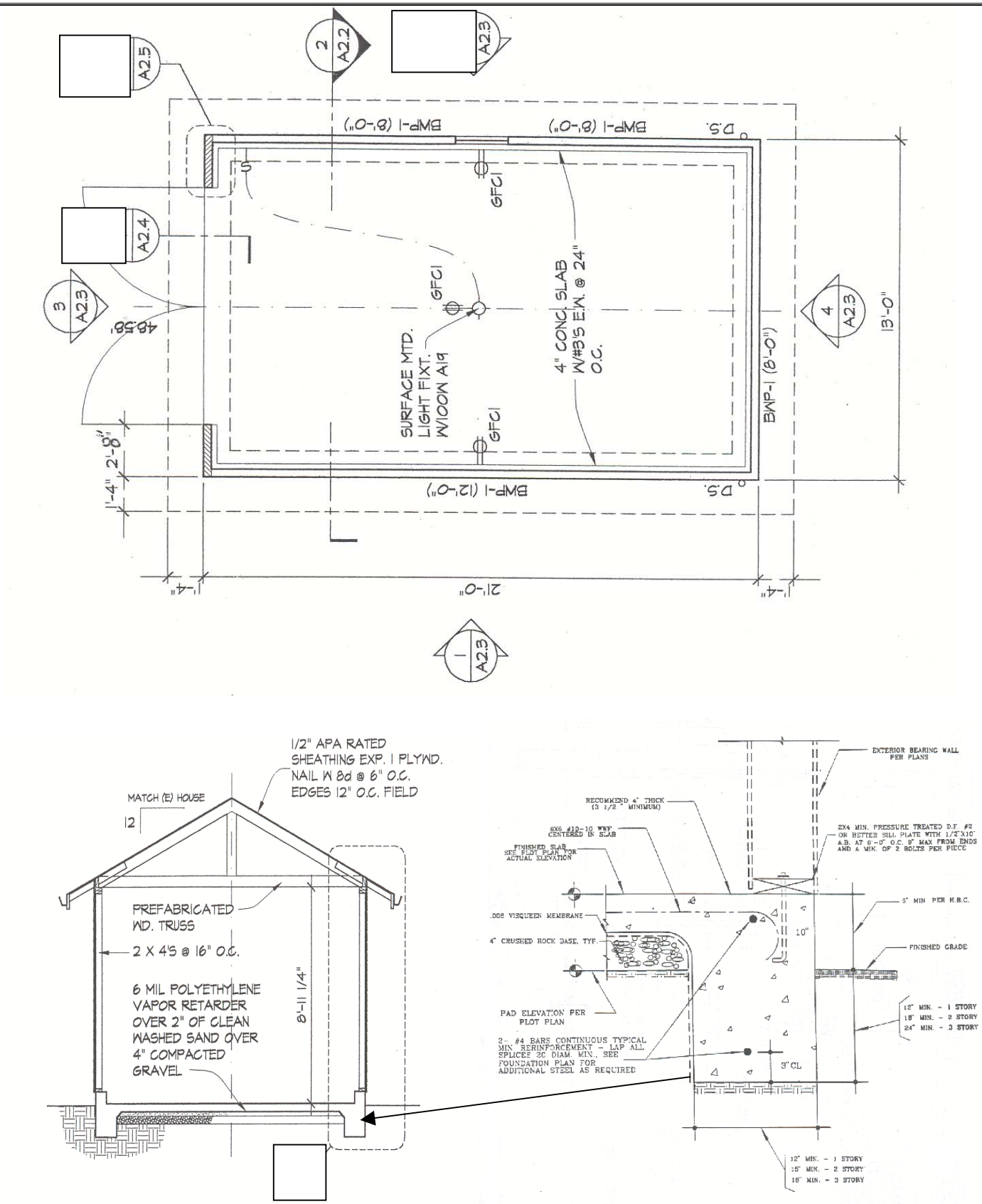
A2.5
2
A2.2
A2.3
BWP-1 (8'-0")
BWP-1 (8'-0")
D.S.
GFCI
A2.4
3
A2.3
48.58'
GFCI
SURFACE MTD.
LIGHT FIXT.
W100W A19
4" CONC. SLAB
W/#3'S E.W. @ 24"
O.C.
4
A2.3
13'-0"
BWP-1 (8'-0")
GFCI
2'-8"
1'-4"
BWP-1 (12'-0")
D.S.
1'-4"
21'-0"
1'-4"
1
A2.3
1/2" APA RATED
SHEATHING EXP. 1 PLYWD.
NAIL W 8d @ 6" O.C.
EDGES 12" O.C. FIELD
MATCH (E) HOUSE
12
PREFABRICATED
WD. TRUSS
2 X 4'S @ 16" O.C.
6 MIL POLYETHYLENE
VAPOR RETARDER
OVER 2" OF CLEAN
WASHED SAND OVER
4" COMPACTED
GRAVEL
8'-11 1/4"
EXTERIOR BEARING WALL
PER PLANS
RECOMMEND 4" THICK
(3 1/2 " MINIMUM)
6X6 #10-10 WWF
CENTERED IN SLAB
FINISHED SLAB
SEE PLOT PLAN FOR
ACTUAL ELEVATION
2X4 MIN. PRESSURE TREATED D.F. #2
OR BETTER SILL PLATE WITH 1/2"X10"
A.B. AT 6'-0" O.C. 9" MAX FROM ENDS
AND A MIN. OF 2 BOLTS PER PIECE
.006 VISQUEEN MEMBRANE
4" CRUSHED ROCK BASE, TYP.
10"
6" MIN PER H.B.C.
FINISHED GRADE
PAD ELEVATION PER
PLOT PLAN
2- #4 BARS CONTINUOUS TYPICAL
MIN. REINFORCEMENT - LAP ALL
SPLICES 20 DIAM. MIN., SEE
FOUNDATION PLAN FOR
ADDITIONAL STEEL AS REQUIRED
3" CL
12" MIN. - 1 STORY
18" MIN. - 2 STORY
24" MIN. - 3 STORY
12" MIN. - 1 STORY
18" MIN. - 2 STORY
18" MIN. - 3 STORY

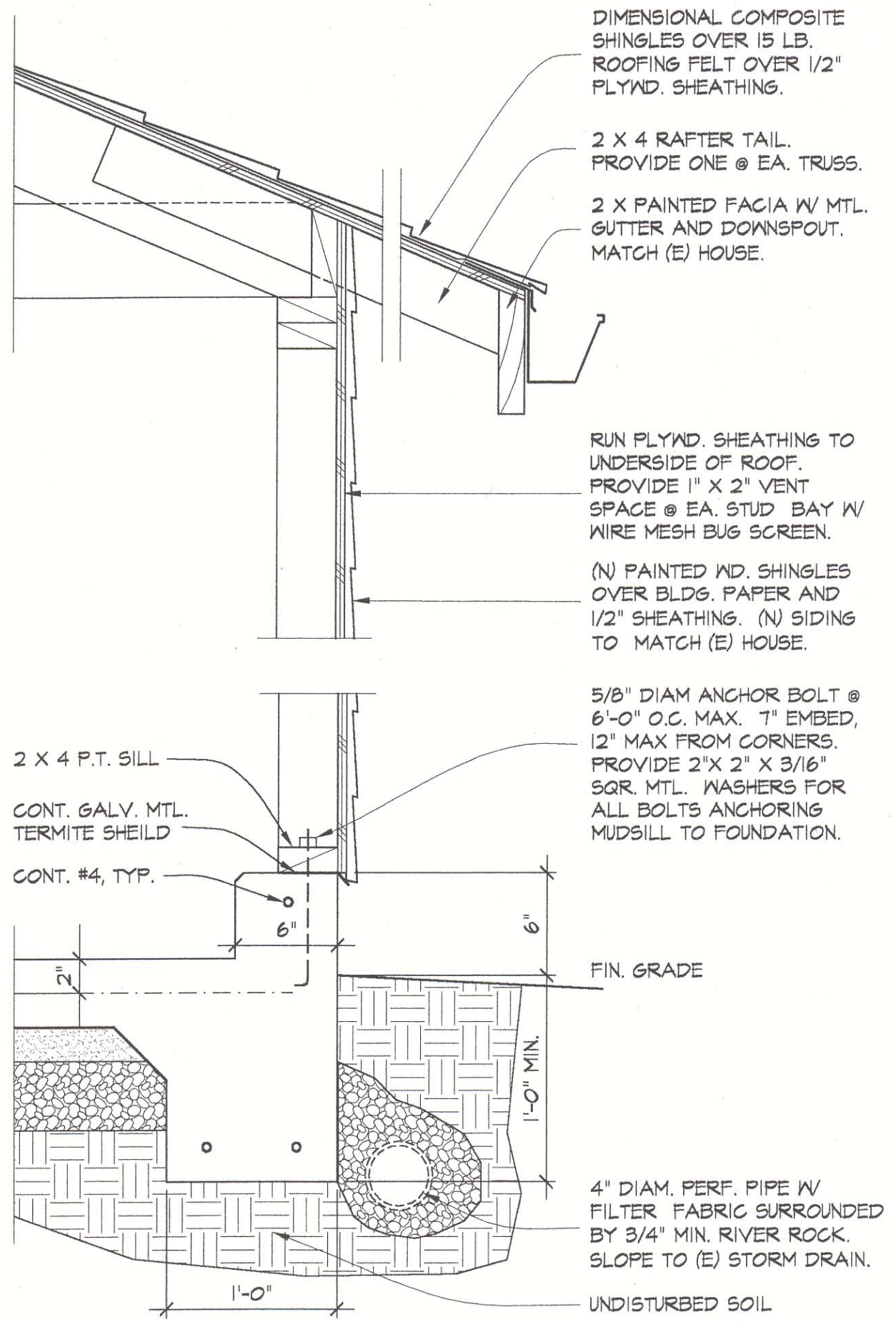
DIMENSIONAL COMPOSITE SHINGLES OVER 15 LB. ROOFING FELT OVER 1/2" PLYWD. SHEATHING.
2 X 4 RAFTER TAIL. PROVIDE ONE @ EA. TRUSS.
2 X PAINTED FACIA W/ MTL. GUTTER AND DOWNSPOUT. MATCH (E) HOUSE.
RUN PLYWD. SHEATHING TO UNDERSIDE OF ROOF. PROVIDE 1" X 2" VENT SPACE @ EA. STUD BAY W/ WIRE MESH BUG SCREEN.
(N) PAINTED WD. SHINGLES OVER BLDG. PAPER AND 1/2" SHEATHING. (N) SIDING TO MATCH (E) HOUSE.
5/8" DIAM ANCHOR BOLT @ 6'-0" O.C. MAX. 7" EMBED, 12" MAX FROM CORNERS. PROVIDE 2"X 2" X 3/16" SQR. MTL. WASHERS FOR ALL BOLTS ANCHORING MUDSILL TO FOUNDATION.
2 X 4 P.T. SILL
CONT. GALV. MTL. TERMITE SHEILD
CONT. #4, TYP.
6"
6"
2"
FIN. GRADE
1'-0" MIN.
4" DIAM. PERF. PIPE W/ FILTER FABRIC SURROUNDED BY 3/4" MIN. RIVER ROCK. SLOPE TO (E) STORM DRAIN.
1'-0"
UNDISTURBED SOIL

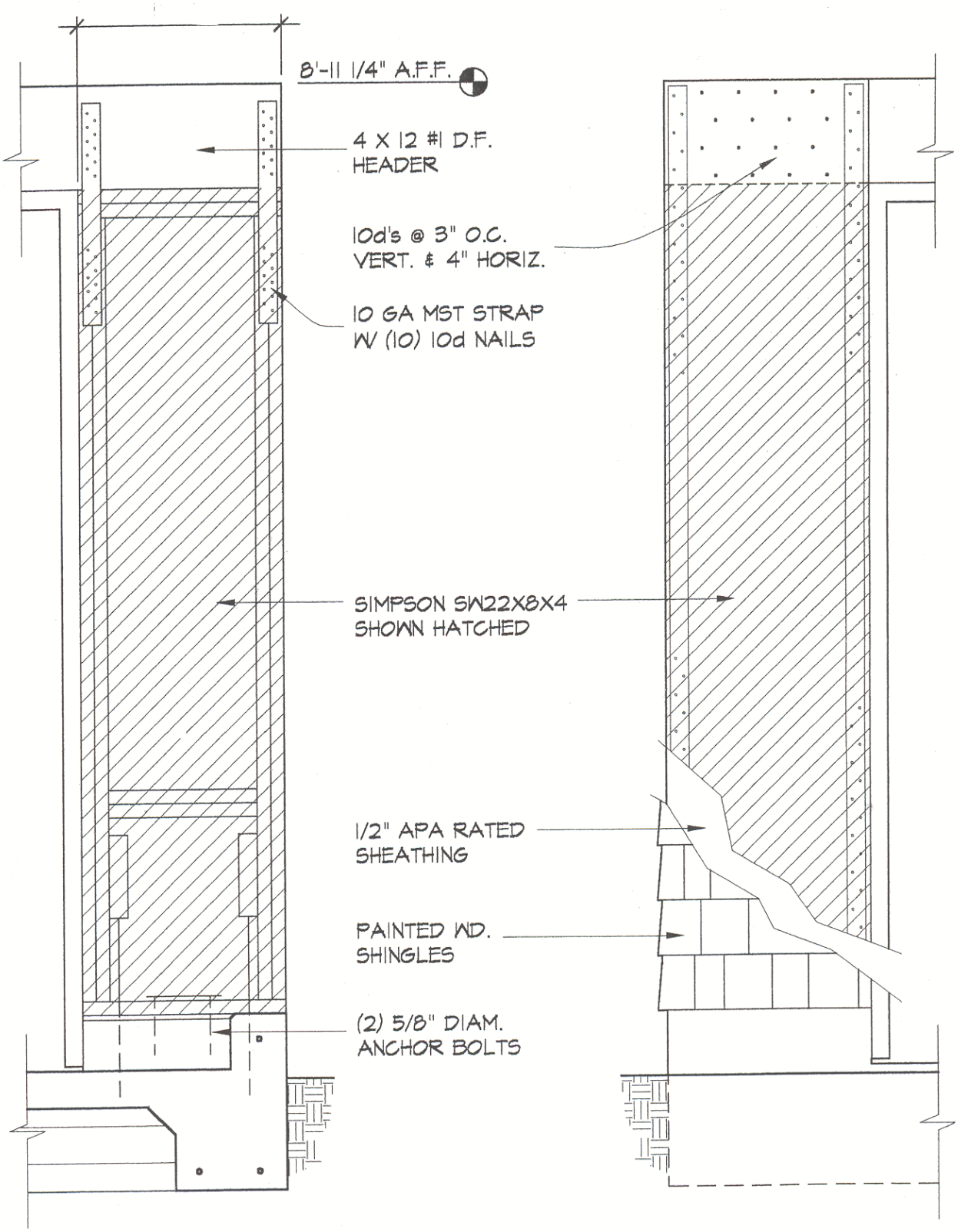
8'-11 1/4" A.F.F.
4 X 12 #1 D.F.
HEADER
10d's @ 3" O.C.
VERT. & 4" HORIZ.
10 GA MST STRAP
W/ (10) 10d NAILS
SIMPSON SW22X8X4
SHOWN HATCHED
1/2" APA RATED
SHEATHING
PAINTED WD.
SHINGLES
(2) 5/8" DIAM.
ANCHOR BOLTS

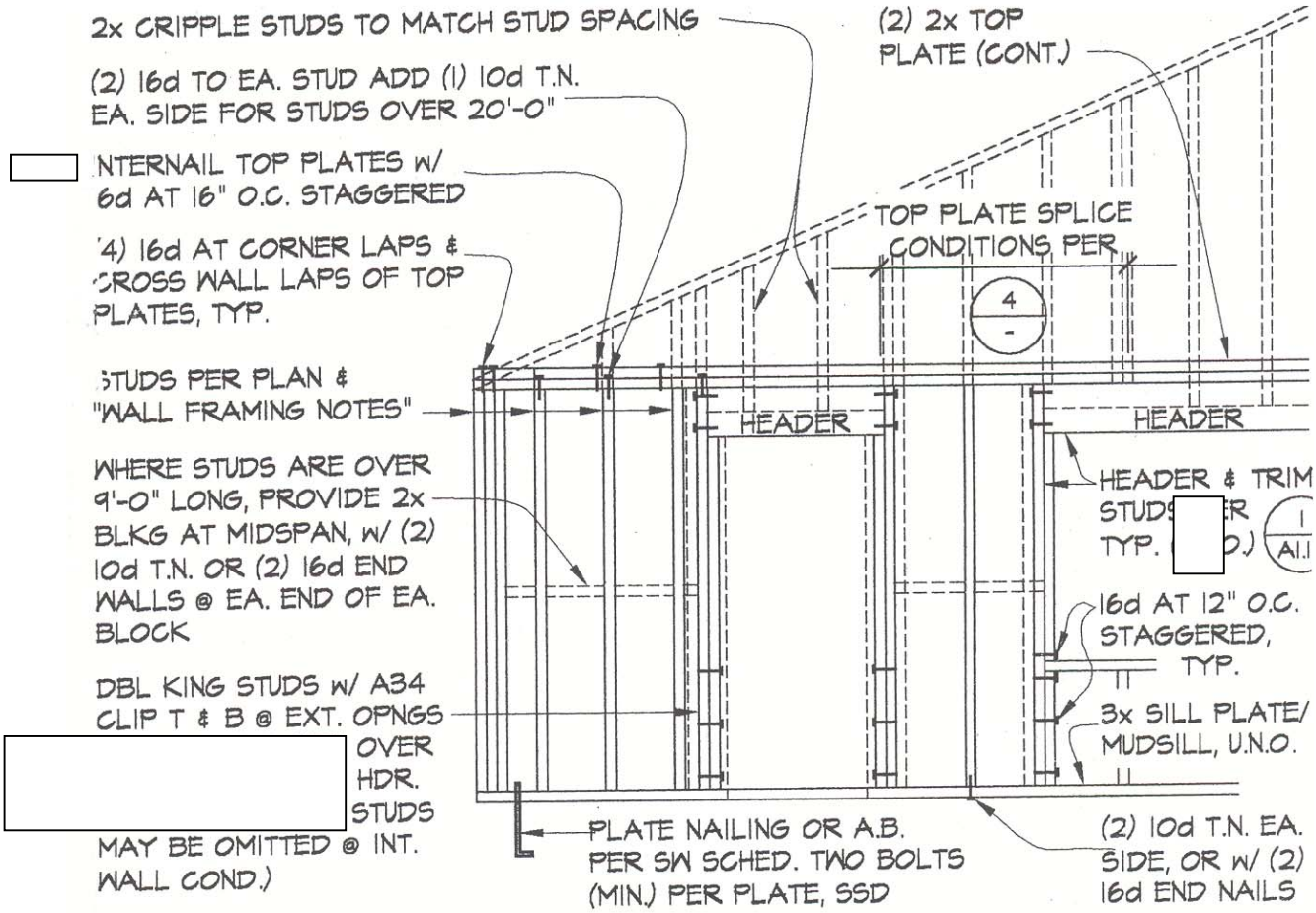

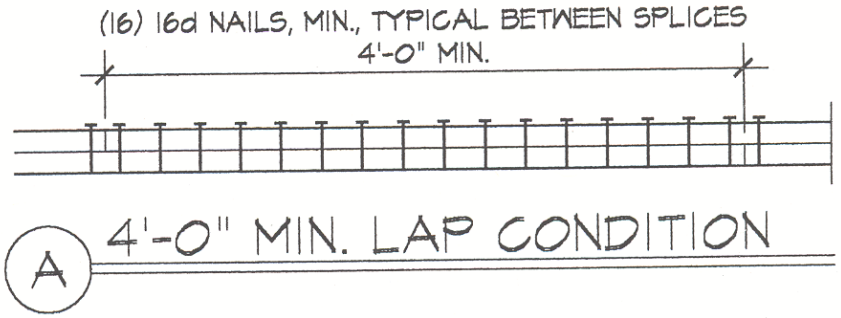

A 4'-0" MIN. LAP CONDITION

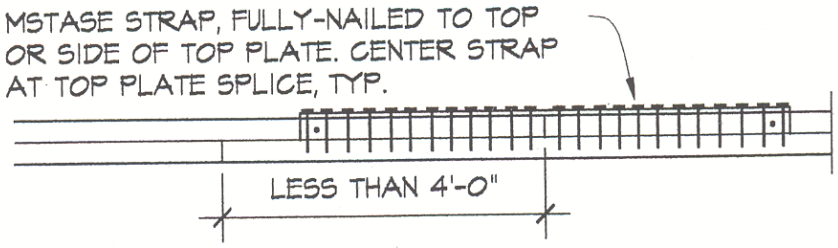

B LESS THAN 4'-0" LAP COND.

REQUIRED AT SHORT LAPS.

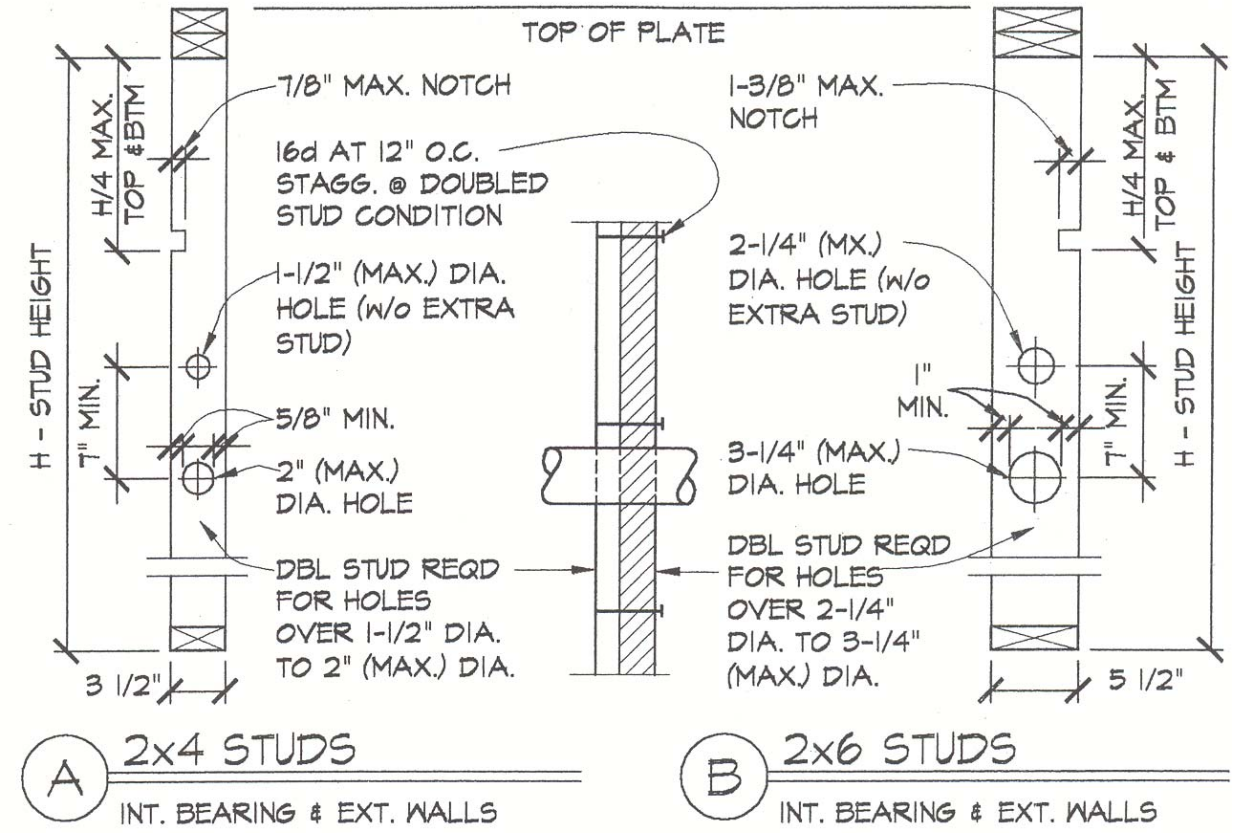

NOTE: AT NON-BEARING WALLS: NOTCHES UP TO 40% OF STUD WIDTH & HOLES UP TO 60% OF STUD WIDTH ARE PERMITTED W/O ADD'L STUD REINF.

1. 1. ALL EXTERIOR AND SHEAR WALLS ARE CONSIDERED AS BEARING. INTERIOR BEARING WALLS ARE SHOWN ON THE PLANS AS SHADED.
2. PROVIDE BEARING WALLS PER SCHEDULE, U.N.O. (S.A.D.):

MAX. WALL HT	EXTERIOR WALL	INTERIOR WALL
10'-0"	2x4 AT 16" O.C.	2x4 AT 16" O.C.
12'-0"	2x4 AT 16" O.C.	2x4 AT 16" O.C.
14'-0"	2x6 AT 16" O.C.	2x4 AT 16" O.C.
18'-0"	2x6 AT 16" O.C.	2x6 AT 16" O.C.
20'-0"	2x6 AT 12" O.C.	2x6 AT 16" O.C.

3. TWO STORY BALLOON-FRAMED WALLS THAT ARE NOT CONNECTED OR LOW ROOF SHALL BE PER SCHEDULE, UNLESS NOTED OTHERWIDE.
4. IN BALLOON-FRAMED WALLS, PROVIDE DOUBLE KING STUDS AT EACH EXTERIOR DOOR, WINDOW, AND CLERETORY WINDOW OPENINGS, TYPICAL.
5. INTERIOR NON-BEARING WALLS SHALL BE AS FOLLOWS:
   UPPER FLOOR: 2x4 STUDS AT 16" O.C., TYPICAL, U.N.O.
   LOWER FLOOR: 2x4 STUDS AT 16" O.C., TYPICAL, U.N.O.
6. SHEARWALL SHEATHING SHALL BE PER THE PLANS AND THE SHEARWALL SCHEDULE. SEE THE PLANS FOR LOCATIONS, AND SIDE OF WALL OF SHEARWALL SHEATHING.

SPAN ALLOWANCES

(NOT FOR TILE ROOFS)

~ ALL VALUES BASED ON DOUGLAS FIR-LARCH GRADE No.2

FLOOR JOISTS L/360 40LL+10DL

SIZE	SPACING	ALLOWABLE SPAN
2x6	12"oc	10'-9"
	16"oc	9'-9"
	24"oc	8'-2"
2x8	12"oc	14'-2"
	16"oc	12'-7"
	24"oc	10'-2"
2x10	12"oc	17'-8"
	16"oc	15'-3"
	24"oc	12'-3"
2x12	12"oc	20'-6"
	16"oc	17'-7"
	24"oc	14'-4"

CEILING JOISTS L/240 10LL+5DL

SIZE	SPACING	ALLOWABLE SPAN
2x4	12"oc	12'-2"
	16"oc	10'-9"
	24"oc	8'-8"
2x6	12"oc	19'-6"
	16"oc	17'-8"
	24"oc	14'-9"
2x8	12"oc	25'-8"
	16"oc	22'-10"
	24"oc	18'-6"
2x10	12"oc	26'-0"
	16"oc	25'-5"
	24"oc	22'-3"

RAFTERS L/240 20LL+10DL

SIZE	SPACING	ALLOWABLE SPAN
2x4	12"oc	9'-7"
	16"oc	8'-6"
	24"oc	7'-0"
2x6	12"oc	15'-4"
	16"oc	13'-9"
	24"oc	11'-7"
2x8	12"oc	20'-3"
	16"oc	18'-1"
	24"oc	14'-10"
2x10	12"oc	24'-10"
	16"oc	21'-6"
	24"oc	17'-7"
2x12	12"oc	25'-2"
	16"oc	25'-2"
	24"oc	20'-6"

PURLINS

PURLIN SIZE*	STRUT SPACING
2x4	2x4 @ 4'-0" oc
2x6	2x4 @ 6'-0" oc
2x8	2x4 @ 8'-0" oc
2x10	2x4 @10'-0" oc

* NOT SMALLER THAN SUPPORTING RAFTERS

WINDOW AND DOOR HEADERS*

SIZE	OPENING	LOADING
4x4	UP TO 4'-0"	325 LB/FT
4x6	4'-0" TO 6'-0"	357 LB/FT
4x8	6'-0" TO 8'-0"	349 LB/FT
4x10	8'-0" TO 10'-0"	363 LB/FT
4x12	10'-0" TO 12'-0"	373 LB/FT
4x12	GARAGE DOOR 16'-0" - (NOT FOR TILE ROOF)	

* SUPPORTING CONVENTIONAL ROOF LOADS ONLY

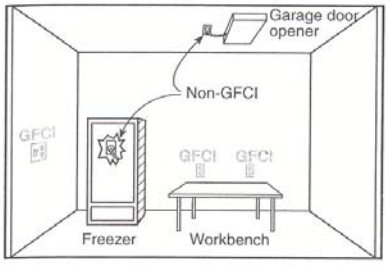

Figure 210.12 Examples of receptacles in a garage that are required Section 210-8(a)(2) to have GFCI protection. Some receptacles are exempt because they are not readily accessible or are located for an appliance occupying dedicated space.

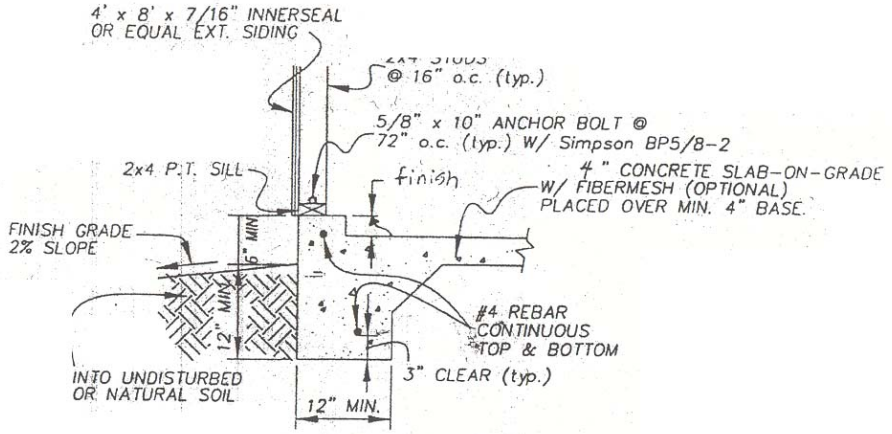

(B) TYP. MONOLYTHIC DETAIL

NO SCALE

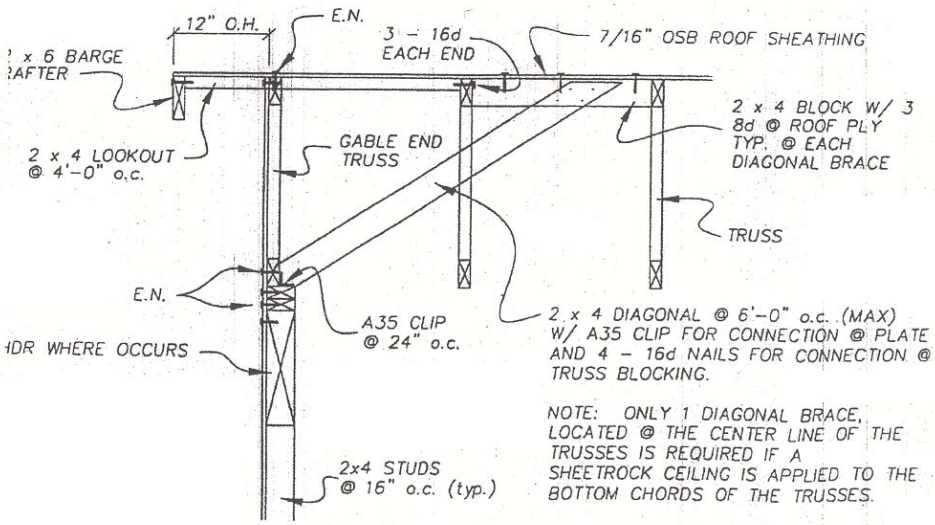

(C) TYP. OUTLOOKER DETAIL

NO SCALE

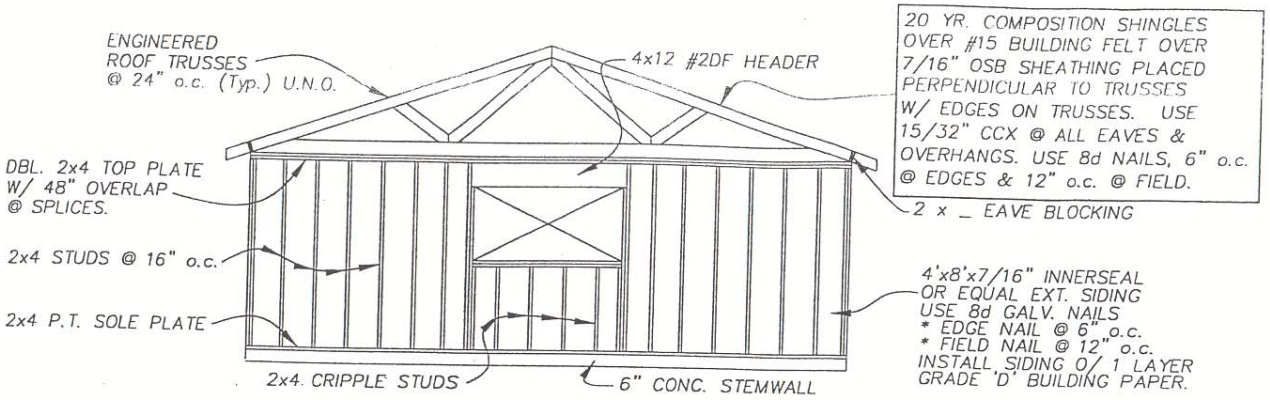

(D) FRAMING DETAIL
NO SCALE

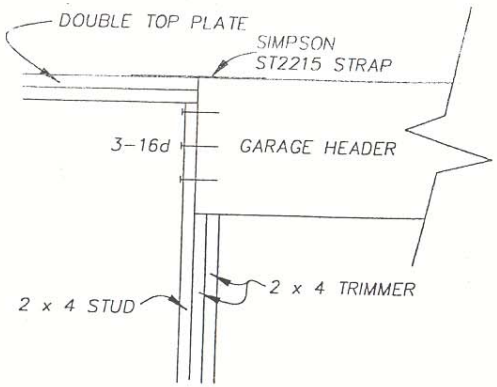

(C) GARAGE HEADER DETAIL
NO SCALE

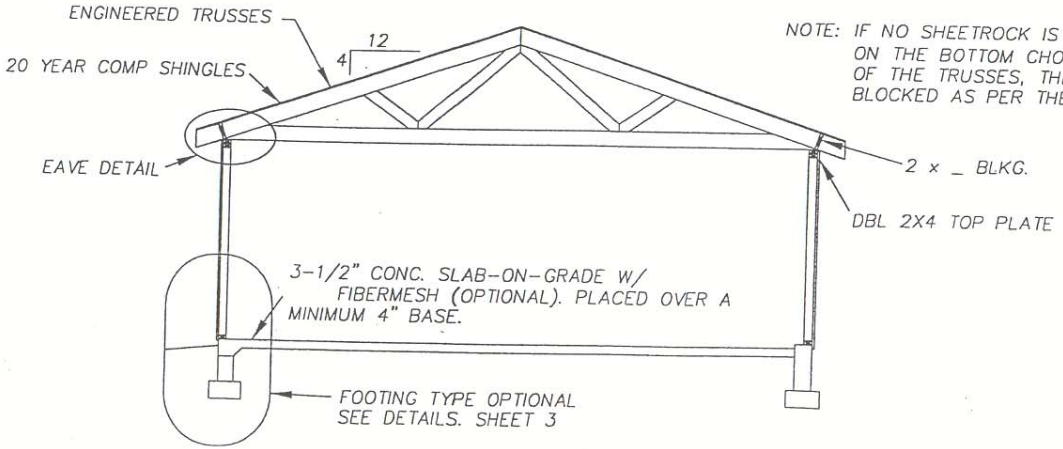

NOTE: IF NO SHEETROCK IS INSTALLED ON THE BOTTOM CHORDS (CEILING) OF THE TRUSSES, THEY MUST BE BLOCKED AS PER THE TRUSS ENGINEERING.

(A) TYPICAL SECTION
NO SCALE

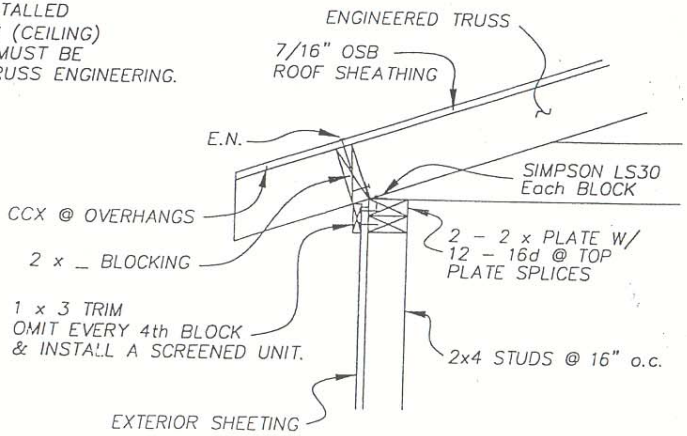

EAVE DETAIL
NO SCALE